EQ−4101
様式−26

HOSHIZAKI

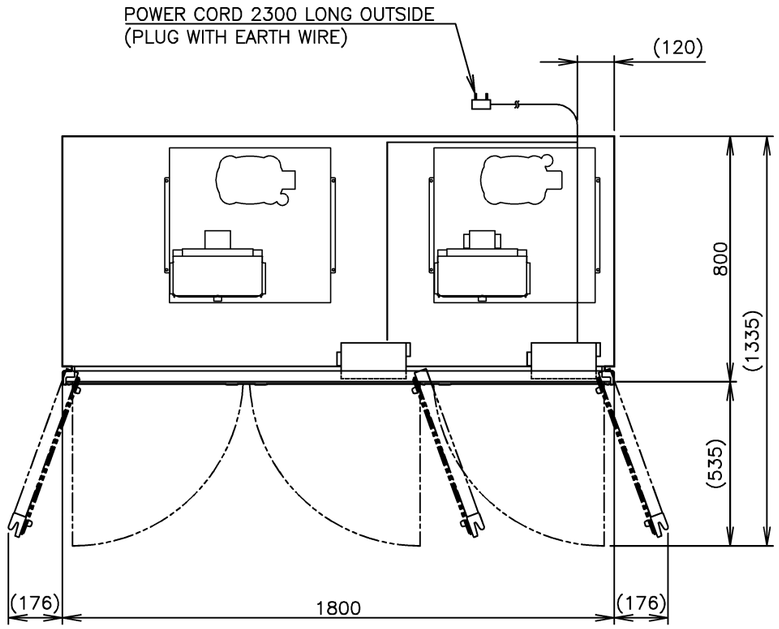

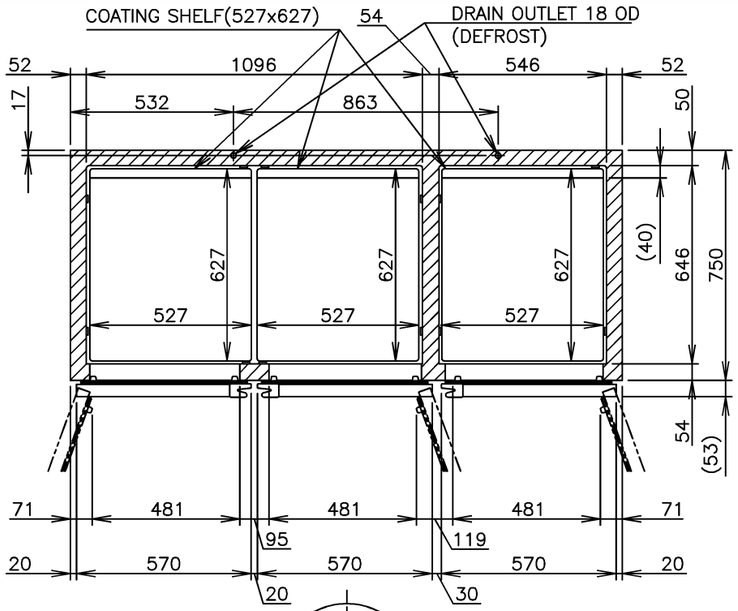

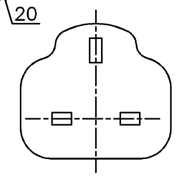

UK PLUG

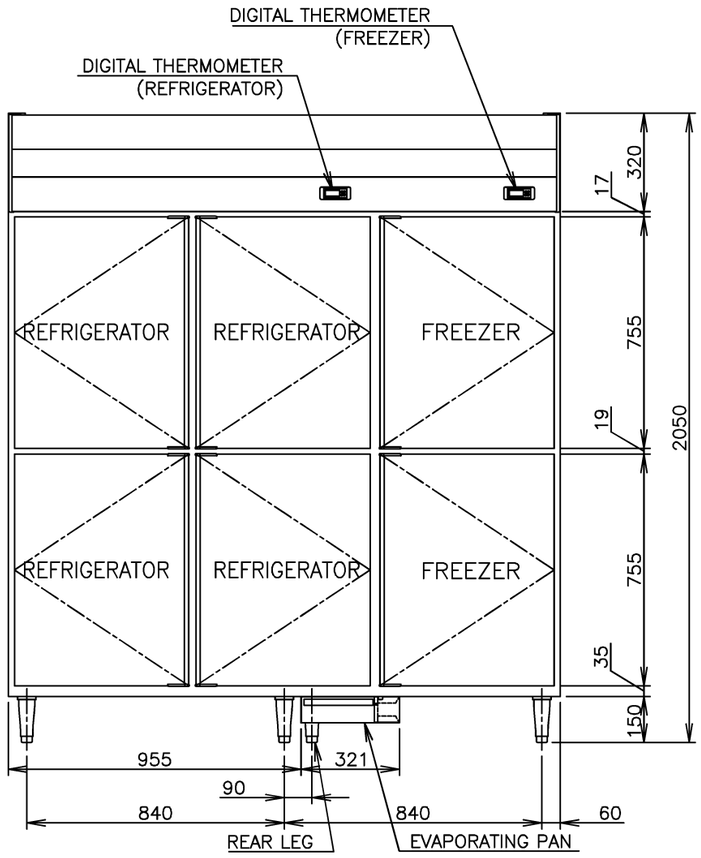

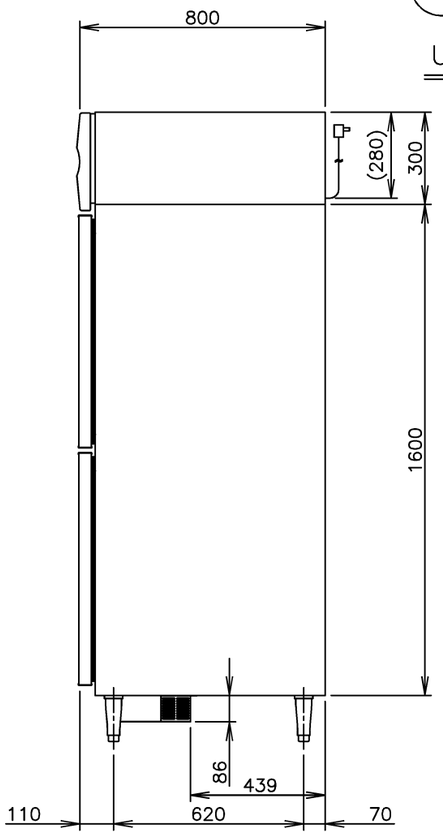

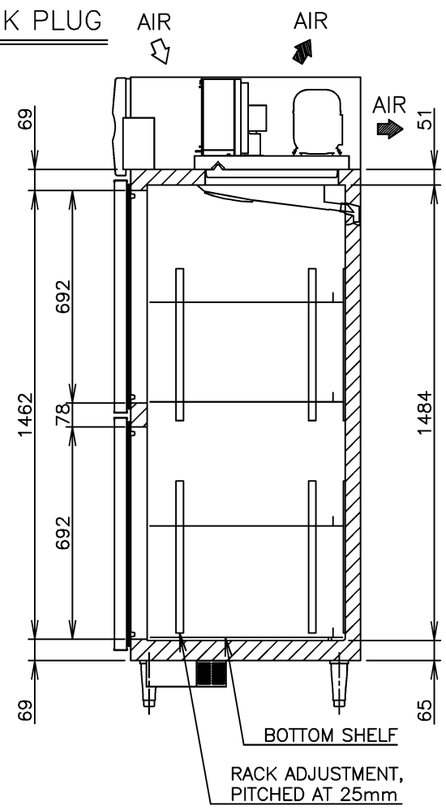

ITEM	Hoshizaki Reach−in Freezer/Refrigerator	
MODEL	HRF−188MA−S	
POWER SUPPLY	1 Phase 220 − 240V 50Hz Capacity: 1.25kVA (5.70A)	
AMPERAGE	Rated: 6.5A Starting: 12.0A	
ELECTRIC CONSUMPTION	752W (Power Factor: **%) Heater: 497W Defrost: 497W	
HEAT REJECTION	1320W	
POWER CORD	2.3m (UK Plug with Earth Wire)	
EFFECTIVE CAPACITY	Total 1523L (Refrigerator: 1025L, Freezer: 498L)	
OUTSIDE DIMENSIONS	1800mm(W)×800mm(D)×2050(−2080)mm(H)	
INSIDE DIMENSIONS	Refrigerator	1096mm(W)×646mm(D)×1484mm(H)
	Freezer	546mm(W)×646mm(D)×1484mm(H)
EXTERIOR	Stainless Steel, Galvanized Steel(Top, Rear, Bottom)	
INTERIOR	Stainless Steel, ABS Plastic(Door)	
INSULATION	Polyurethane Foam	
INSULATION FOAM BLOWING AGENT	Cyclopentane	
REFRIGERATION SYSTEM	Forced Air Circulation	
DEFROST SYSTEM	Refrigerator	Off Cycle
	Freezer	Heater
COMPRESSOR	Refrigerator	Hermetic 270W(Cooling Capacity)
	Freezer	Hermetic 480W(Cooling Capacity)
CONDENSER	Refrigerator	Fin and Tube Type, Air−cooled
	Freezer	Fin and Tube Type, Air−cooled
EVAPORATOR	Refrigerator	Fin and Tube type
	Freezer	Fin and Tube type
REFRIGERANT	Refrigerator	R134a
	Freezer	R404A
TEMPERATURE CONTROL	Refrigerator	Microprocessor Controlled (Digital Temperature Indication) Adjustable from −2 to 12°C
	Freezer	Microprocessor Controlled (Digital Temperature Indication) Adjustable from −23 to −7°C
DEFROST CONTROL	Microprocessor	
ELECTRIC CIRCUIT PROTECTION	Earth Wire, Circuit Breaker	
REFRIGERANT CIRCUIT PROTECTION	Motor Protector (Auto−reset)	
LEG	Plastic Adjustable from 150 to 180mm	
SHELF	12 pcs.	
WEIGHT	220kg (Gross 262kg)	
PACKAGE	Carton (Wooden Pallet) 1860mm(W)×900mm(D)×2075mm(H)	
ACCESSORIES	Drain Hose x 2, Drain Pan x 1	
OPERATING CONDITIONS	Ambient Temperature: 5 − 43°C Voltage Range: Rated Voltage ±6%	

*We reserve the right to make changes in specifications and design without prior notice.

1. Install the product properly in accordance with the instructions on location, water supply/drain connections and electrical connections stated in the instruction and installation manuals provided.
   Allow 10mm extra space at the installation site to meet any installation requirements (additional spacing is also required for proper air flow and pipe connections).
2. The heat rejection is based on the reached pulldown temperature at ambient temperature of 35°C.
3. Product Code: R574−D100 (HS)

HOSHIZAKI REACH−IN FREEZER/REFRIGERATOR HRF−188MA−S

APPROVED KAWAKAMI	CHECKED WANG	DESIGNED LIANG	DRAWN KAWAKAMI	SCALE 1/20	TRIGONOMETRY
* (APPROVED)	* (DESIGNED)	△ (SYMBOL)	***** (DATE)	DATE 2018.10.19	DRAWING NO. D23749 / SYMBOL △

000520
施行